BT Module

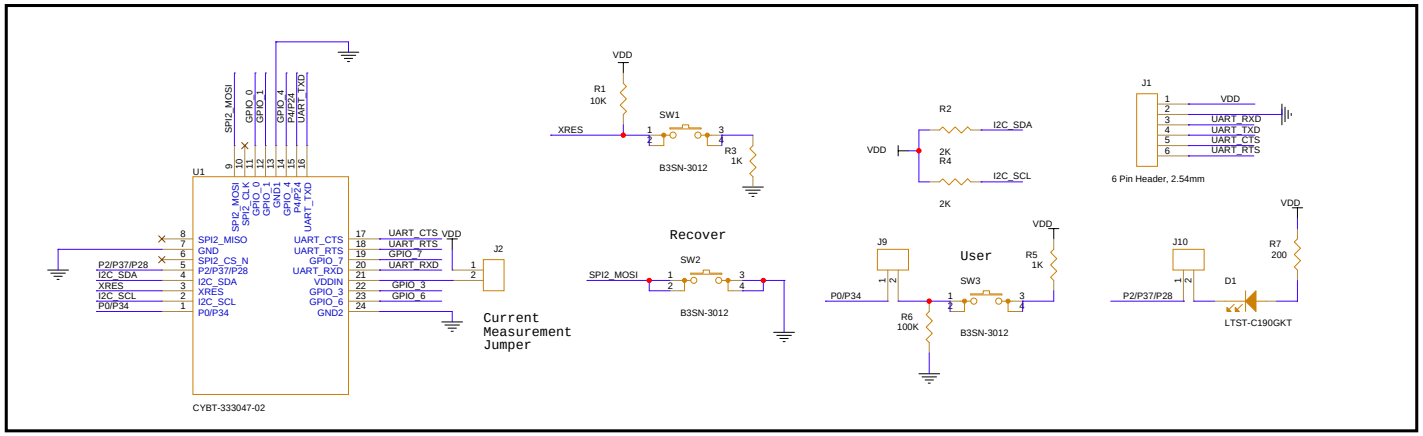

USB to Serial

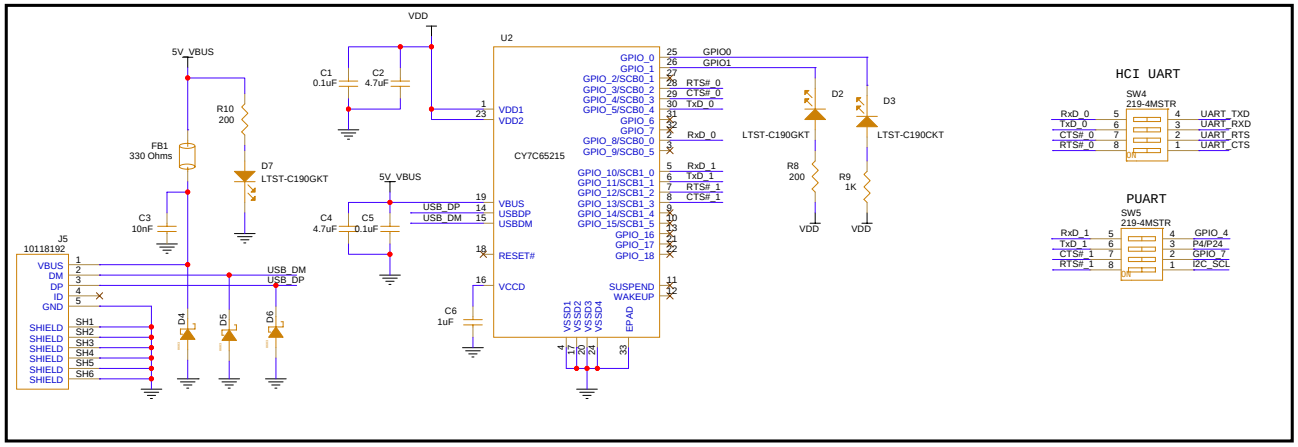

Arduino Connector

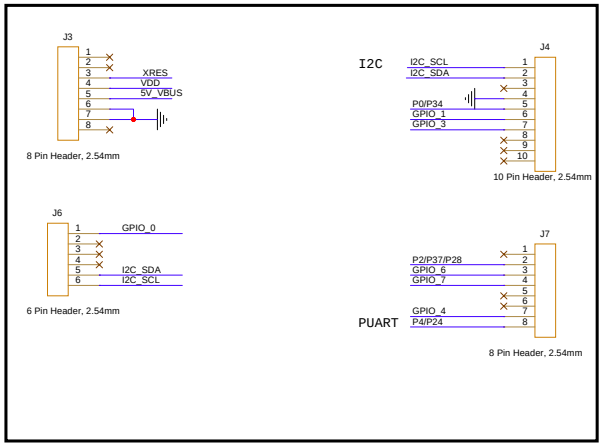

POWER

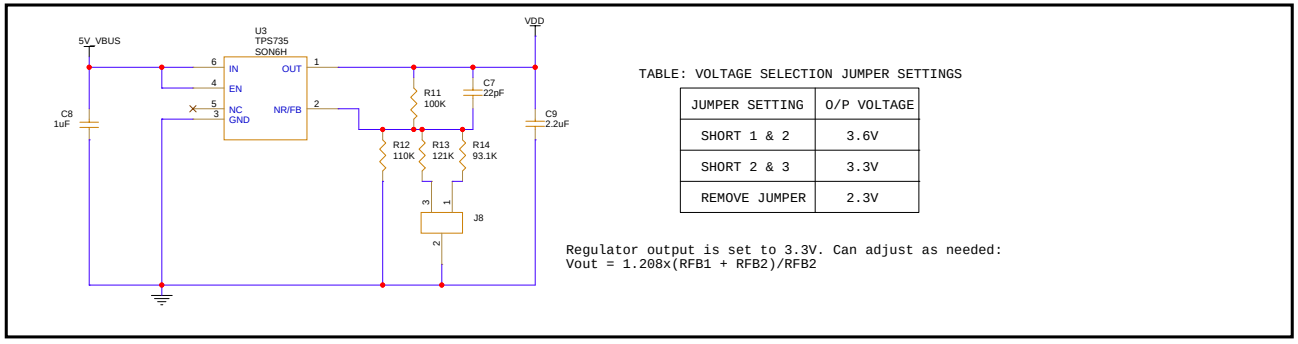

TABLE: VOLTAGE SELECTION JUMPER SETTINGS

JUMPER SETTING	O/P VOLTAGE
SHORT 1 & 2	3.6V
SHORT 2 & 3	3.3V
REMOVE JUMPER	2.3V

Regulator output is set to 3.3V. Can adjust as needed:
Vout = 1.208x(RFB1 + RFB2)/RFB2

Title	CYBT-333047-EVAL		
Size	Document Number	630-20109-01	Rev 2.0
Date:	Tuesday, July 28, 2026	Sheet 1 of 1	